SECTION –A
(TOTAL MARKS=75)

1. This question consists of 25 (TWENTTY FIVE) sub-questions. Each sub-question carries ONE mark. The answers to these sub-questions MUST be written only in the appropriate boxes corresponding to the questions in the first page of the answer book.

(25×1=25)

1.1 When the plate area of a parallel plate capacitor is increased keeping the capacitor voltage constant, the force between the plates
(A) increase
(B) decreases
(C) remains constant
(D) may increase or decrease depending on the metal making up the plates.

1.2 Two parallel wires separated by a distance *d* are carrying a current *I* in the same direction. The magnetic field along a line running parallel to these wires and midway between them
(A) depends upon I
(B) is zero .
(C) depends upon d
(D) depends upon the permeability of medium between the wires.

1.3 An electromagnetic field is radiated from
(A) a stationary point charge .
(B) a capacitor with a DC voltage .
(C) a conductor carrying a DC current
(D) an oscillating dipole .

1.4 The mobility of an electron in a conductor is expressed in terms of
(A) cm^2 / V_{-s}
(B) cm/ V_{-s}
(C) cm^2 / V
(D) cm^2 / s.

1.5 An enhancement type n-channel MOSFET is represented by the symbol

CL GATEaspire AN IIT/IISc ALUMNI VENTURE

(A)

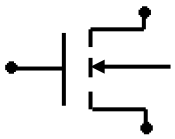

(B)

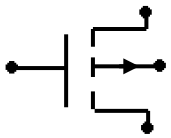

(C)

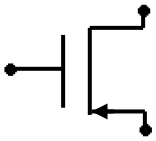

(D)

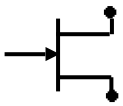

1.6 As the temperature is increased, the voltage across a diode carrying a diode carrying a constant current

(A) increases
(B) decreases
(C) remains constant
(D) may increase or decrease depending upon the doping levels in the junction

1.7 A single channel digital storage oscilloscope uses a 10 bit, 10^7 samples per second Analog-to-Digital Converter. For a 100 KHz sine wave input, the number of samples taken per cycle of the input will be

(A) 10^7
(B) 10^4
(C) 10^3
(D) 10^2

1.8 Higher synchronous reactance is preferred in the present day alternators, because one can have

(A) reduced sub-transient currents
(B) reduced harmonic currents
(C) reduced transient currents
(D) higher voltage regulation with load

1.9 A series R-L-C circuit when excited by a 10V sinusoidal voltage source of variable frequency, exhibits resonance at 100 Hz and has a 3 *d*B bandwidth of 5 Hz. The voltage across the inductor L at resonance is:

(A) 10 V
(B) $10\sqrt{2}$V
(C) $10/\sqrt{2}$V
(D) 200 V

CL GATEaspire AN IIT/IISc ALUMNI VENTURE

1.10 The RMS value of a half-wave rectified symmetrical square wave current of 2A is

(A) $\sqrt{2}$ A
(B) 1 A
(C) 1 / $\sqrt{2}$ A
(D) $\sqrt{3}$ A

1.11 Electrodynamic type wattmeters have large errors while measuring power in ac circuits at low power factor conditions, since the voltage across and the current through the

(A) current coil are not in phase
(B) current coil are not in quadrature
(C) pressure coil are not in phase
(D) pressure coil are not in quadrature

1.12 The current in the circuit shown in Figure is:

(A) 5A (B) 10A (C) 15A (D) 25A

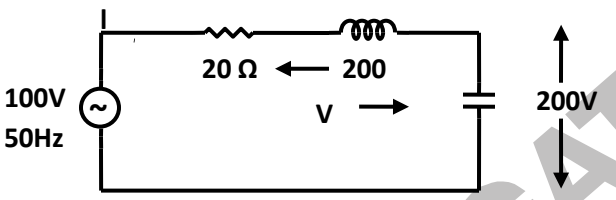

1.13 For the circuit shown in the figure. The capacitance measured between terminals B and Y will be

(A) $C_C + (C_S / 2)$
(B) $C_S + (C_C / 2)$
(C) $(C_S + 3C_C) / 2$
(D) $3C_C + 2C_S$

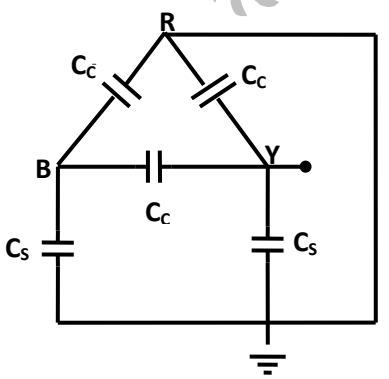

1.14 An overhead line having a surge impedance of 400Ω is connected in series with an underground cable having a surge impedance of 100Ω. If a surge of 50 kV travels from the line end towards the line-cable junctions, the value of the transmitted voltage wave at the junction is:

(A) 30 kV
(B) 20 kV
(C) 80 kV
(D) -30 kV

1.15 The load carrying capability of a long AC transmission line is:

(A) always limited by the conductor size
(B) limited by stability considerations
(C) reduced at low ambient temperatures
(D) decreased by the use of bundled conductors of single conductors

1.16 Corona losses are minimized when

(A) conductor size is reduced
(B) smooth conductor is reduced
(C) sharp points are provided in the line hardware
(D) current density in conductors is reduced

1.17 In a DC transmission line

(A) it is necessary for the sending end and receiving end to be operated in synchronism.
(B) the effects of inductive and capacitive reactances are greater than in an AC transmission line of the same rating.
(C) there are no effects due to inductive and capacitive reactances.
(D) power transfer capability is limited by stability considerations.

1.18 Steady state stability of a power system is the ability of the power system to

(A) maintain voltage at the rated voltage level.
(B) maintain frequency exactly at 50 Hz .
(C) maintain a spinning reserve margin at all times.
(D) maintain synchronism between machines and on external tie lines.

1.19 Three sections of a feeder are provided with circuit breakers CB1, CB2, CB3, CB4, CB5 and CB6. For a fault F as indicated in Figure.

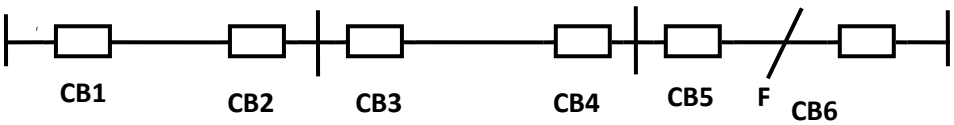

(A) CB5 must be set to trip after CB1 trips
(B) CB5 must be set to trip after CB3 and CB4 trip
(C) CB5 must be set to trip after CB2 trips
(D) CB5 must be set to trip before CB1, CB2, CB3 and CB4 trip

1.20 A 4-pole lap-wound DC generator has a developed power of P watts and voltage of E volts. Two adjacent brushes of the machine are removed as they are worn out. If the machine operates with the remaining brushes, the developed voltage and power that can be obtained from the machine are
(A) E, P.
(B) E / 2, P/2.
(C) E, P /4.
(D) E, P / 2.

1.21 Starting torque can be obtained in the case of a single phase induction motor with identical main and auxiliary windings by connecting
(A) a capacitor across the mains
(B) a capacitor in series with the machine
(C) a capacitor in series with the auxiliary winding
(D) the main and the auxiliary windings in series

1.22 The windings of a QkVA, V_1/ V_2 volt, three-phase, Delta connected, core type transformer are reconnected to work as a single phase transformer. The maximum voltage and the power ratings of the new configuration are,
(A) $3V_1$ / $3V_2$, 3Q
(B) V_1/ V_2, Q /3
(C) $\sqrt{3}V_1$ / $\sqrt{3}V_2$, 2Q
(D) $2V_1$ / $2V_2$, 2Q / 3

1.23 Resonant converters are basically used to
(A) generate large peaky voltage.
(B) reduce the switching losses.
(C) eliminate harmonics.
(D) convert a square wave into a sine wave.

1.24 A PWM switching scheme is used with a three phase inverter to
(A) reduce the total harmonic distortion with modest filtering.
(B) minimize the load on the DC side .
(C) increase the life of the batteries .
(D) reduce low order harmonics and increase high order harmonics .

1.25 The following starting method for an induction motor is inferior view of the poor starting torque per ampere of the line current drawn:
(A) Direct on line starting.
(B) Auto transformer method of starting.
(C) Series inductor method of starting.

CL GATEaspire AN IIT/IISc ALUMNI VENTURE

(D) Star-Delta method of starting.

2. This question consists of 25 (TWENTTY FIVE) sub-questions. Each sub-question carries TWO marks. The answers to these sub-questions MUST be written only in the appropriate boxes corresponding to the questions in the second sheet of the answer book.

2.1 The color code of a 1 kΩ resistance is:

(A) black, brown, red
(B) red, brown, brown
(C) brown, black, red
(D) black, black, red

2.2 A rectangular current pulse of duration T and magnitude I has the Laplace Transform

(A) I / s
(B) (I /s) exp (-Ts)
(C) (I/s) exp (Ts)
(D) (I/ s)[1 – exp (Ts)]

2.3 A rectangular voltage pulse of magnitude V and duration T is applied to a series combination of resistance R and capacitance C. The maximum voltage developed across the capacitor is:

(A) V [1 – exp (-T / RC)]
(B) VT / RC
(C) V
(D) V exp (- T /RC)

2.4 When a periodic triangular voltage of peak amplitude 1 V and frequency 0.5 Hz is applied to a parallel combination of 1Ω resistance and 1 F capacitance, the current through the voltage source has wave-form.

(A)
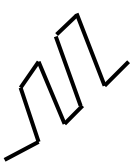

(B)

(C)

(D)
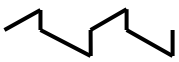

2.5 For a flip-flop formed from two NAND gates as shown in Figure The unusable state corresponds to

(A) X = 0, Y = 0
(B) X = 0, Y = 1
(C) X = 1, Y = 0
(D) X = 1, Y = ∞

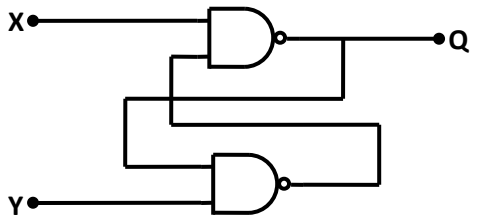

2.6 The logic function f = $\overline{(x\,.\,\overline{y}) + (\overline{x}\,.\,y)}$ is the same as

(A) f = (x + y) ($\overline{x} + \overline{y}$)

(B) f = $\overline{(\overline{x} + \overline{y}) + (x + y)}$

(C) f = $\overline{(x\,.\,y)}$. ($\overline{x}\,.\,\overline{y}$)

(D) none of (A), (B),(C).

2.7 The function corresponding to the Bode plot of Figure, is

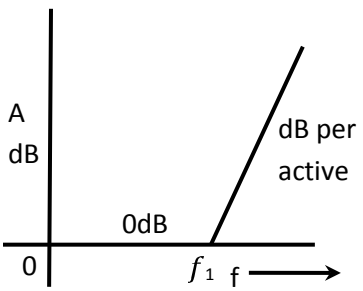

(A) A = j f / f_1

(B) A = 1 / (1 – j f_1 / f)

(C) A = 1 /(1 + j f_1 /f)

(D) A = 1 +j f / f_1

2.8 For a single phase overhead line having solid copper conductors of diameter 1 cm, spaced 60 cm between centers, the inductance in mH/km is

(A) 0.05 + 0.2 ln 60

(B) 0.2 ln 60

(C) 0.05 + 0.2 lm (60 / 0.5)

(D) 0.2 ln (60 / 0.5)

2.9 A single phase AC distributor supplies two single phase loads as shown in Figure The voltage drop from A to C is:

CL GATEaspire AN IIT/IISc ALUMNI VENTURE

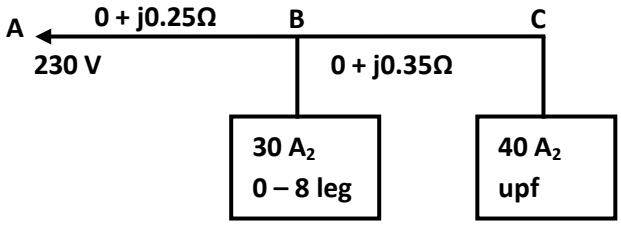

(A) 4.5 V
(B) 31.5 V
(C) 30 V
(D) 20 V

2.10 An industrial consumer has a daily load pattern of 2000 kW, 0.8 lag for 12 hours, and 1000 kW UPF for 12 hours. The load factor is

(A) 0.5
(B) 0.75
(C) 0.6
(D) 2.0

2.11 A 220 kV, 20 km long, 3-phase transmission line has the following A, B, C, D constants. A = D = $0.96 \angle 3^0$, B = $55\angle 65°\Omega$ / phase, C = 0.5E - $04\angle 80°$S / phase. Its charging current per phase is:

(A) $11 / \sqrt{3}$ A.
(B) 11A
(C) 220A
(D) $220 / \sqrt{3}$ A

2.12 A 3-phase, 11 kV, 50 Hz, 200 kW load has a power factor of 0.8 lag. A delta connected 3-phase capacitor is used to improve the power factor to unity. The capacitance per-phase of the capacitor in micro-farads is

(A) 3.948
(B) 1.316
(C) 0.439
(D) 11.844

2.13 A 10 kVA, 400 V/200V single-phase transformer with 10% impedance draws a steady short circuit line current of

(A) 50 A
(B) 150 A
(C) 250 A
(D) 350 A

2.14 The percentage resistance and percentage reactance of a 10 kVA, 400 V/200 V, 3-phase transformer are 2% and 10% respectively. If the constant losses in the machine are 1%, the maximum possible percentage efficiency of the transformer is

(A) 98.32.
(B) 97.25.
(C) 96.85.
(D) 96.12.

2.15 A 400V/100V, 10 kVA two-winding transformer is reconnected as an auto-transformer across a suitable voltage source. The maximum rating of such an arrangement could be

(A) 50 kVA
(B) 15 kVA
(C) 12.5 kVA
(D) 8.75 kVA

2.16 A DC shunt motor is running at 1200 rmp, when excited with 220 V DC. Neglecting the losses and saturation, the speed of the motor when connected to a 175 V DC supply is:

(A) 750 RPM
(B) 900 RPM
(C) 1050 RPM
(D) 1200 RPM

2.17 A three phase alternator is wound with a 60 degree phase-spread armature windings and develops 300 kVA. If the armature is reconnected utilizing all the coils for single phase operation with a phase spread of 180 degrees, the new rating of the machine is

(A) 100 kVA
(B) 200 kVA
(C) 250 kVA
(D) 300 kVA

2.18 A 10 kVA, 400 V/200 V, single phase transformer with a percentage resistance of 3% and percentage reactance of 6% is supplying a current of 50 A to a resistive load. The value of the load voltage is:

(A) 194 V
(B) 390 V
(C) 192 V
(D) 196 V

2.19 For a dual ADC type 3 1/ 2digit DVM, the reference voltage is 100 mV and the first integration time is set to 300 ms. For some input voltage, the "deintegration "period is 370.2 ms. The DVM will indicate

(A) 123.4
(B) 199.9
(C) 100.0
(D) 1.41 4

2.20 When a resistor R is connected to a current source, it consumes a power of 18 W. When the same R is connected to a voltage source having the same magnitude as the current source, the power absorbed by R is 4.5 W. The magnitude of the current source and the value of R are

(A) $\sqrt{18}$A and 1Ω
(B) 3A and 2Ω
(C) 1A and 18Ω
(D) 6A ad 0.5 Ω

2.21 A current of [2 +$\sqrt{2}$ sin(sin 314t + 30) +2 $\sqrt{2}$ cos (952t + 45)]is measured with a thermocouple type, 5A full-scale, class 1 meter. The meter reading would lie in the range

(A) 5 A $\pm$ 1 %
(B) (2 + 3$\sqrt{2}$) A $\pm$ 1 %
(C) 3A $\pm$ 1.7 %
(D) 2A $\pm$ 2.5 %

2.22 Currents I_1 I_2 and I_3 meet at a junction (node) in a circuit. All currents are marked as entering the node. If I_1 = -6 sin(ωt) mA and I_2 = 8 cos(ω t) mA, then I_3 will be

(A) 10 cos (ωt + 36.87)mA
(B) 14 cos (ωt + 36.87)mA
(C) – 14 sin (ωt + 36.87)mA
(D) -10 cos (ωt + 36.87)mA

2.23 Two 100µA full-scale PMMC meters are employed to construct a 10 V and a 100V full scale voltmeter. These meters will have figures of merit (sensitivities) as

(A) 10 kΩ/V and 10 kΩ/V
(B) 100 kΩ/V and 10 kΩ/V
(C) 10 kΩ/V and 100 kΩ/V
(D) 10 kΩ/V and 1 kΩ/V

2.24 A fixed capacitor of reactance -j0.02Ω is connected in parallel across a series combination of a fixed inductor of reactance j0.01Ω and a variable resistance R. As R is varied from zero to infinity, the locus diagram of the admittance of this L-C-R circuit will be

(A) a semi-circle of diameter j 100 and center at zero.
(B) a semi-circle of diameter j 50 and center at zero
(C) a straight line inclined at an angle
(D) a straight line parallel to the x-axis

2.25 The voltage phasor of a circuit is 10∠15° V and the current phasor is 2∠-45° A. The active and the reactive powers in the circuit are:

(A) 10 W and 17.32 VAr
(B) 5 W and 8.66 VAr
(C) 20W and 60 VAr
(D) 20 $\sqrt{2}$ W and 10 $\sqrt{2}$ VAr

CL GATEaspire AN IIT/IISc ALUMNI VENTURE

SECTION - B

(TOTAL MARKS=75)

This section consists of TWENTY questions of FIVE marks each. ANY FIFTEEN out of them have to be answered. If more number of questions are attempted, score off the answers not be evaluated, else, only the first fifteen unscored answers will be considered.

(15×5=75)

3. Solve the circuit shown in figure. using the mesh method of analysis and determine the mesh currents I_1, I_2 and I_3.Evaluate the power developed in the 10V voltage source

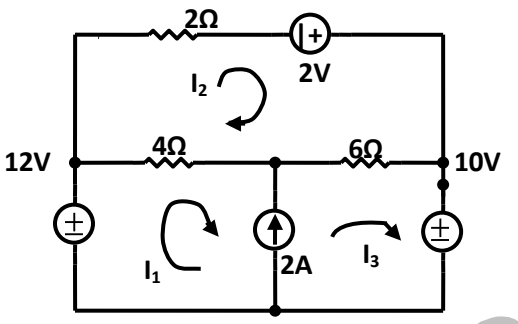

4. A constant voltage frequency sinusoidal voltage source of magnitude V_s is connected to a series circuit made of a resistance of 15Ω, a coil of winding resistance R and inductance L and a 50 μF capacitor. The voltage across the 15Ω resistor is 30V, across the coil is 50V, across the capacitor is 40 V. The voltage across the combination of the 15Ω resistor and the coil together is 72.11 V. Determine the values of the inductance L, winding resistance R and the source voltage V.

5. The ratio error of a given 1000 / 5A current transformer is zero when feeding 5 VA, upf burden at rated current. Estimate the iron loss of the current transformer at this operating condition if the secondary has 198 turns and a winding resistance of 0.02Ω. Neglect leakage reactance.

6. A charge +Q is uniformly distributed throughout the volume of a dielectric sphere of radius R and dielectric constant ε_R. Based on Gauss law, determine the expressions for the electric field E as a function of distance r from the center of the sphere, within the ranges $0 < r < R$ and $R \leq r$. Indicate expression(s) for the critical point (s) on the sketch.

7. The logic function F = AC + ABD + ACD is to be realized using an 8 to 1 multiplexer shown in figure, using A, C and D as control inputs.

   (a) Indicate the inputs to be applied at the terminals 0 to 7.

   (b) Can the function be realize using a 4 to 1 multiplexer?

   State YES or NO.

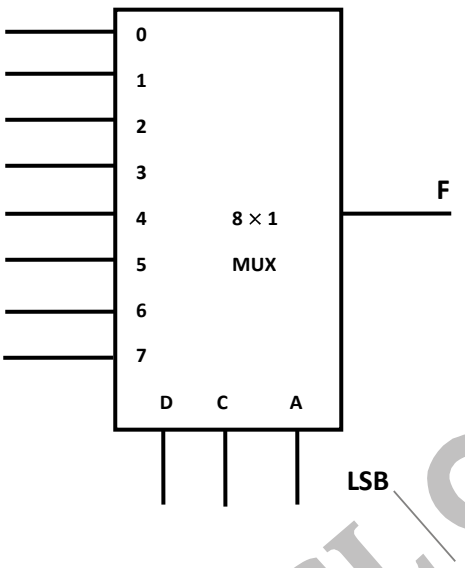

8. For the network of the given Figure obtain the state equation in terms of capacitor voltage, V_c and inductor current i_1.

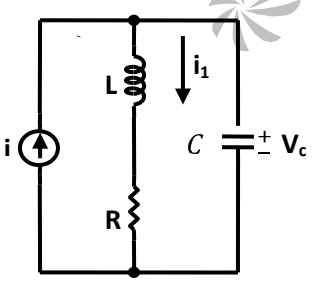

9. For the small signal BJT amplifier shown in the given figure, determine at 1 kHz, the following:

   (A) quiescent collector current, I_{cQ}

(B) small signal voltage gain, (v_0 / v_i);

(C) maximum possible swing of the collector current

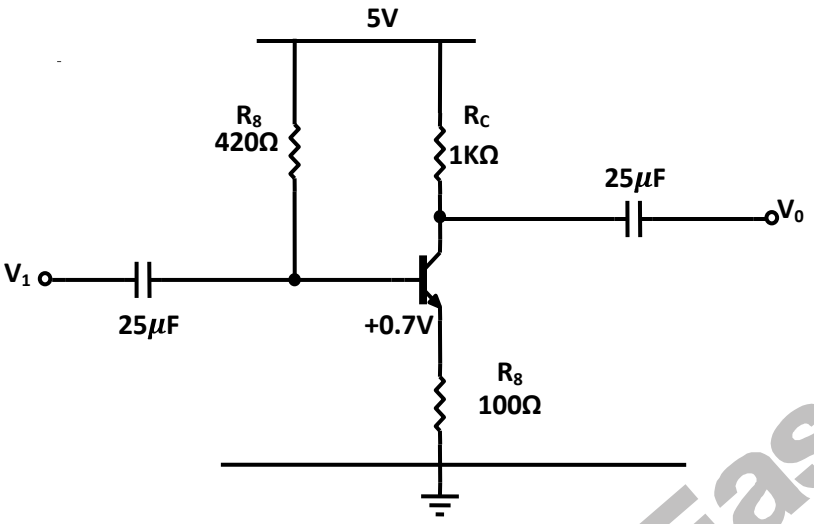

10. The input voltage v_i in the circuit shown in Figure is a 1 kHz sine wave of 1 V amplitude. Assume ideal operational amplifiers with 15 $\pm$ V DC supply. Sketch on a single diagram the waveforms of the voltages v_i1,v_0 and v_1 shown, indicating the peak value of v_1 and the average value v_0.

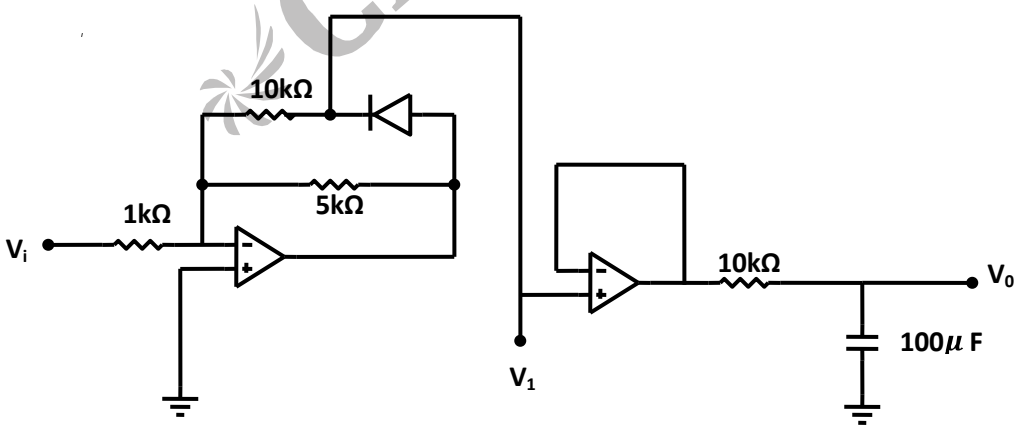

11. Determine the magnitudes of the symmetrical components (I_{aQ+}, I_{a+}, I_{a-}) of the currents in a three phase (RYB) three wire system, when a short circuit occurs between R and Y phase wires, the fault current being 100A.

12. A 6.6 kV, 50 Hz, single core lead-sheathed cable has the following data:
    Conductor diameter: 1.5 cm, length:4 km
    Internal diameter of the sheath : 3 cm
    Resistivity of insulation : $1.3 \times 10^{12}\Omega$-m
    Relative permittivity of insulation : 3.5

    Calculate:
    (a) the insulation resistance

    (b) the capacitance and

    (c) the maximum electric stress in the insulation

13. A 66 kV, 3-phase, 50 Hz, 150 km long overhead transmission line is open circuited at the receiving end. Each conductor has a resistance of 0.25Ω/km, an inductive reactance of 0.5Ω/km and a capacitive admittance to neutral of 0.04×10^{-4} S/km. (a) Draw the nominal π-equivalent circuit and indicate the value of each parameter. (b) Calculate the receiving end voltage if the sending end voltage is 66 kV.

14. Determine the required MVA rating of the circuit breaker CB for the system shown in figure. Consider the grid as infinite bus. Choose 6 MVA as base. Transformer: 3-phase, 33/11 kV, 6 MVA, 0.01 + j0.08 p.u. impedance.
    Load: 3-phase, 11 kV, 5800 kVA, 0.8 lag, j0.2 p.u. impedance.

    Impedance of each feeder 9 + j18Ω.

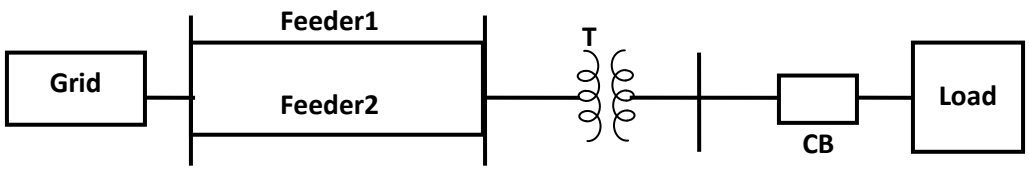

15. In a transmission line each conductor is at 20 kV and is supported by a string of 3 suspension insulators. The air capacitance between each cap-pin junction and tower is one-fifth of the capacitance C of each insulator unit. A guard ring, effective only over the line-end insulator unit is fitted so that the voltages on the two units nearest the line-end are equal.

    (a) Calculate the voltage on the line-end unit.

    (b) Calculate the value of capacitance C_x required

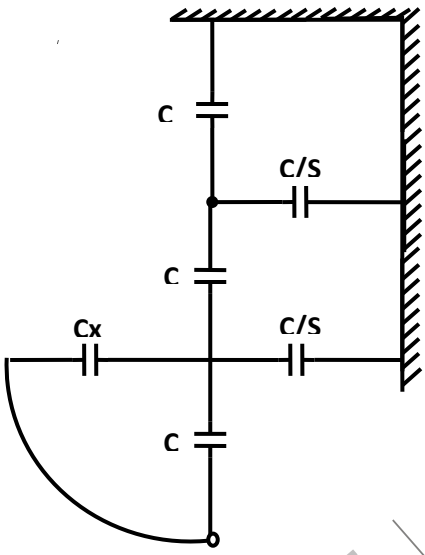

16. In the given circuit , the capacitor is initially charged to 12 V. Find the mathematical expression for the voltage across the capacitor v_c after closing the switch at t = 0.

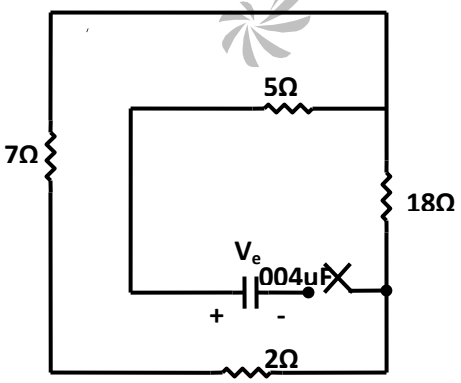

17. A 3 kW, 400V/200V, Delta/Star, 50 Hz, three phase, 6-pole induction motor is found to draw a line current of 25 A at a power factor of 0.4, when a blocked rotor test is conducted at the rated voltage. Determine the stator and rotor winding resistances in ohms per phase, if the torque developed by the motor under the above conditions is 25 N-m.

18. Two single-phase transformers A and B have the following parameters:
Transformer A: 400V/200V, percentage resistance and percentage reactance 3% and 4% respectively.
Transformer B: 5 kVA, 400V/200V, percentage resistance and percentage reactance are 4% and 3% respectively.
These two transformers are connected in parallel and they share a common load of 12 kW at a power factor of 0.8 lagging. Determine the active and reactive power delivered by transformer A.

19. A separately excited DC shunt motor is driving a fan load whose torque is proportional to the square of the speed. When 100 V are applied to the motor, the current taken by the motor is 8A, with the speed being 500 rpm. At what applied voltage does the speed reach 750 rpm and then what is the current drawn by the armature? Assume the armature circuit resistance to be 1Ω. Neglect brush drop and mechanical losses.

20. A 5 MVA, 11 kV, 3-phase star connected alternator is synchronized to the bus bars and is operating with an induced EMF of 125% of the rated voltage. If the load current is 500A, what is the power factor of operation? The machine has a synchronous reactance of 5Ω and negligible resistance per phase.

21. A three phase diode bridge is used to provide rectified output from a 400V, 50 Hz, 3-phase supply to a R-L load with 10Ω resistance and 300 mH inductance.
Determine the

    (a) DC level of the output voltage

    (b) RMS value of the diode current,

    (c) RMS value of the source current, and

    (d) Apparent power drawn from the mains.

22. For the given circuit, the internal resistance of the ammeters as well as that of the current coil of the wattmeter are zero, and the voltmeters have a very large figure of merit. A_1 is a 6A full scale moving iron type meter. A_2 is a commercial full wave rectifier type meter of full scale 5A. V_1 is a 500V meter of the peak response type. V_2 is a 300V PMMC type meter and W is an electrodynamometer type, 5A, 230V wattmeter. Determine the readings of A_1, A_2, V_1, V_2 and W.

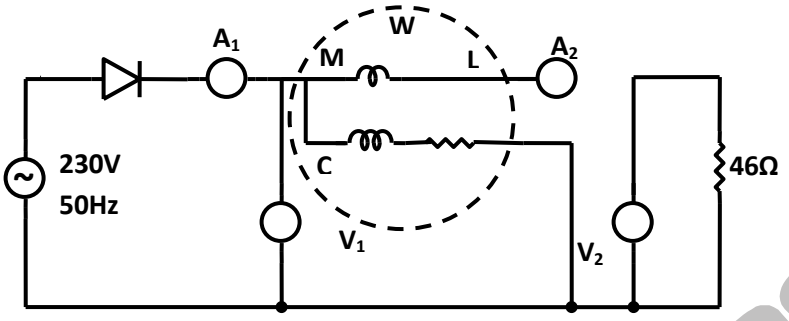

CL GATEaspire AN IIT/IISc ALUMNI VENTURE